8025A AC Axial Fan

8025A AC Axial Fan —80.0 × 80.0 × 25.5 mm

✯ Structural Features

Frame & Blade Material

- Frame: Aluminum alloy
- Impeller: Engineering Plastic

Bearing Structure: Dual Ball Bearings

Rated Service Life: 50,000 hours @ 40°C
Operating Temperature: −40°C ~ +75°C
Storage Temperature: −50°C ~ +85°C

Weight: 240.0 g

✯ Mechanical Dimensions

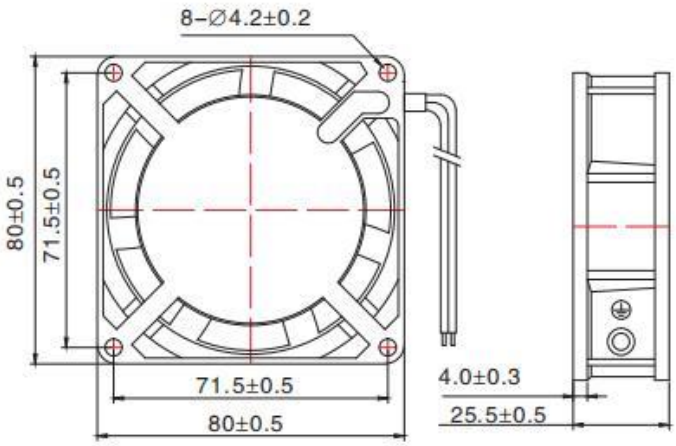

✯ Airflow Performance Curve

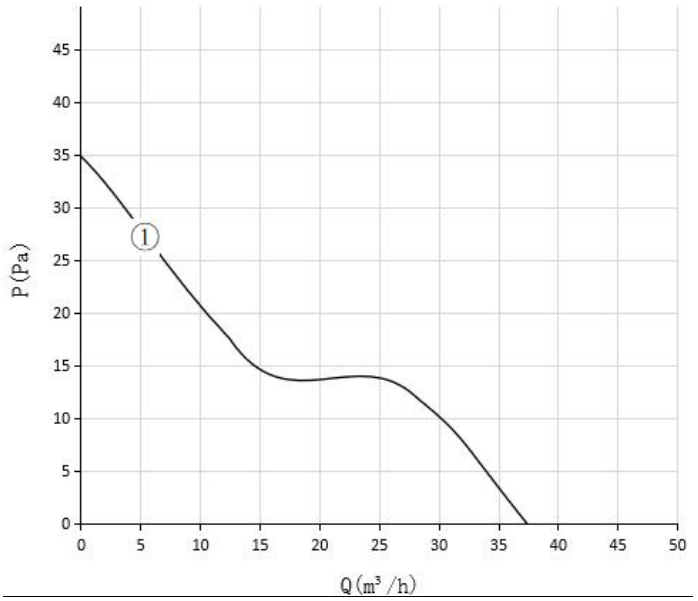

Basic Fan Specifications

Model	Voltage (V)	HZ	Power (W)	Speed (RPM)	Airflow (m³/h)	Pressure (Pa)	Noise (dBA)	Curve
J80FZJ725-25A00	230	50	13.5	2500	37.3	34.9	25.0	①

- **Note: Environmental performance requirements of the fan comply partially with GJB 1423-1992, subject to the specifications detailed in the applicable product datasheet.**